Asian Journal of Electrical Sciences
ISSN: 2249-6297, Vol. 7, No. 2, 2018, pp. 96-99

Design and Fabrication of Model of Tesla Coil

Yogesh Yashwant Pundlik[1] and Gauri Yogesh Pundlik[2]
[1]Professor & Head, Department of EEE, [2]Assistant Professor, Department of ECE,
Kamala Institute of Technology & Science, Singapur, Telangana, India
E-Mail: yogesh4037@rediffmail.com

***Abstract* - This paper discuss the design, fabrication of scaled down of Model of Tesla Coil model for the purpose of explanation to the U.G. students. In Tesla coil gives the high voltage a.c.compared to the DC input to the circuit. The circuit was fabricated. The fabricated coil was tested for breakdown of various solid insulation materials and wireless power transmission.**
***Keywords:* D.C.: Direct Current, A.C.: Alternating Current, U.G.: Under Graduate, RF: Radio Frequency**

I. INTRODUCTION

Tesla coil is a doubly tuned resonant circuit.Actually the TESLA COIL is the Air core transformer in which it has two windings on the same axis. The primary winding is the low voltage, high current winding. And the secondary is high voltage, low current, high frequency winding. [1]A Tesla coil transformer operates in a significantly different fashion from a conventional (i.e., iron core) transformer. In a conventional transformer, the windings are very tightly coupled and voltage gain is determined by the ratio of the numbers of turns in the windings.

This works well at normal voltages but, at high voltages, the insulation between the two sets of windings is easily broken down and this prevents iron cored transformers from running at extremely high voltages without damage. Unlike those of a conventional transformer (which may couple 97%+ of the fields between windings), a Tesla coil's windings are "loosely" coupled, with a large air gap, and thus the primary and secondary typically share only 10–20% of their respective magnetic fields. Instead of a tight coupling, the coil transfers energy (via loose coupling) from one oscillating resonant circuit (the primary) to the other (the secondary) over a number of RF cycles. [6] As the primary energy transfers to the secondary, the secondary's output voltage increases until all of the available primary energy has been transferred to the secondary (less losses).

Even with significant spark gap losses, a well-designed Tesla coil can transfer over 85% of the energy initially stored in the primary capacitor to the secondary circuit. The voltage achievable from a Tesla coil can be significantly greater than a conventional transformer, because the secondary winding is a long single layer solenoid widely separated from the surroundings and therefore well insulated.[5] [6] Also, the voltage per turn in any coil is higher because the rate of change of magnetic flux is at high frequencies. With the loose coupling the voltage gain is instead proportional to the square root of the ratio of secondary and primary inductances. Because the secondary winding is wound to be resonant at the same frequency as the primary, this voltage gain is also proportional to the square root of the ratio of the primary capacitor to the stray capacitance of the secondary. [2]

A. Principle of Working

The primary is fed from a D.C. or a.c. supply through the capacitor C1. A spark gap G is connected across the primary is triggered at the desired voltage V1 which induces self excitation in the secondary. The primary and secondary windings (L1 and L2) are wound on an insulated former with no core (air cored) and immersed in oil. These windings are tuned to frequencies of 10 to 100 KHz by means of capacitances C1 and C2. [1]As shown in the figure (1) below. [1] [2]

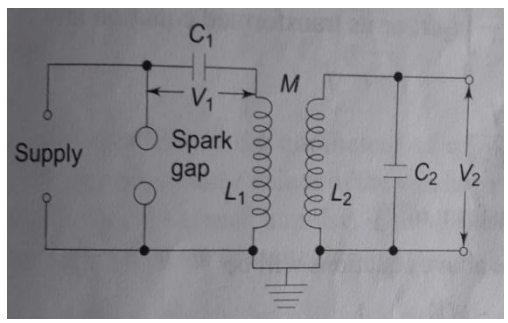

Fig. 1 Equivalent circuit of Tesla Coil

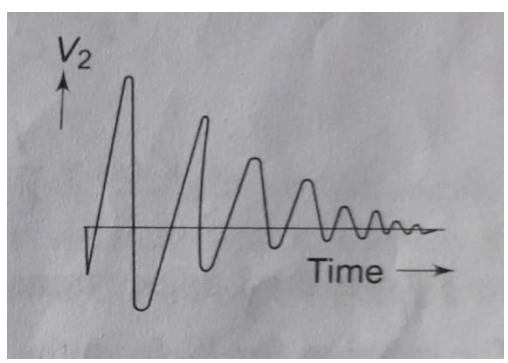

Fig. 2 Output waveform of Tesla coil

[Courtesy: Reference [1]]The Tesla coil can be used in High Voltage Laboratories for producing switching surges

for testing of electrical apparatus. The voltage build up is slow hence, there is no damage to the insulation on account of switching over voltages. The standard switching surge is as shown in the figure (2) below.[Courtesy: Reference [1]]

II. FABRICATION OF TESLA COIL

The basic requirements were: High voltage transformer, a soldering machine, wires, varnish, Spark gap, Toroid,Capacitors. Tesla set up primary and secondary coil i.e. coppers coil (32 SWG) and was fixed up in a hole in a wooden switchboard box. For fabricating a Tesla Coil the following procedure was adopted by the authors.

Step 1: First we started making of secondary winding. For that we have taken a PVC pipe of 2 inch diameter and the copper wire as mentioned above was wound. The number of turns depends on the requirement of the high voltage. We can go with any number of turns at the secondary as per value at output. We used 600 turns. All the turns are entirely by hand wound. After winding an insulating layer has to be coated with varnish. This is shown in figure (4)
Step2:The main problem is to link up flux between primary and secondary. We need to make sure this linkage of flux, otherwise secondary coil L_2 will not respond.
Step3:The setup we created is just like an air core transformer.
Step4:Next now we require a spark gap which is to be coupled to primary coil L_1. The RF wire used for making of L_1 is shown in figure (5). [3] [4] [5]
Step5: We get around 11.5kv output from that circuit at no load i.e. current is zero.

All these connections can be made on the circuit with copper wires with the help of soldering. This may take 2 hours' time for this set up. This set up is placed in placed in a project box which is totally covered with insulation i.e. painted with varnish and dried in sun light.

1. The input to this circuit is 3 v dc and output is magnified to around 1.5kv A.C at no load.
2. How the dc to A.C conversion taking place and how it is magnifying we will that beauty later.
3. This entire circuit has to be used. Before connecting it we need to replace the capacitors with the high voltage capacitors.
4. We have used 3 circuits in series. Now input is 3+3+3=9v D.C
5. We have 2 switches on each circuit one is for key and other for ignition of capacitor. So now we need to connect the keys in series. To connect this we have to remove the wires of each circuit. Remember we need to mark all removed spots.
6. The first switch has to be shorted in all.
7. After that we have to connect the 2nd key of all circuits to a common key i.e. switch and also a safety switch is in series with this switch for more safety.

Fig. 4 Completion of Winding L_2 on insulation former

Fig. 5 Radio frequency insulated wire for fabrication of primary winding

Fig. 6 Fabrication of toroid with aluminum foils.

We chose an insulation material ring which has to be fitted on pipe. For that a ring of diameter just greater than pipe is taken and it is entirely wound with aluminum cover. This toroid for discharge purpose. Now it's time to enjoy the output. We should not forget to ground secondary but as the secondary is at high voltage side we need to take safety precautions.

For that the output of each capacitor from each circuit is connected in series with other one of its points is given to primary of tesla coil and it is placed in one of the spark gap terminal. We used a 3-pin plug for spark gap.

And the other wire from capacitors is given directly to other terminal of primary coil. And the secondary is open this makes the completion of spark gap and connecting our coil.

Fig. 7 Input control circuit for safe operation of Tesla coil circuit

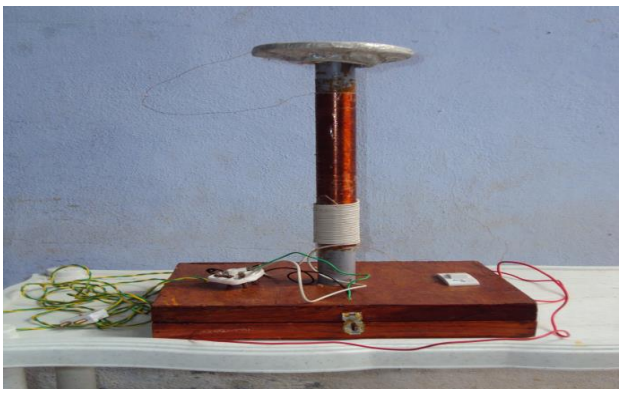

Fig. 8 Tesla Coil with L_1& L_2 wound surrounding the insulator former without resistance potential divider

After the assembly of parts such as the spark gap, primary coil, secondary coil and toroid, the fabricated scaled down model of Tesla coil looks as shown in figure above.

II. FABRICATION OF RESISTANCE POTENTIAL DIVIDER

The potential divider can be created using resistors. 11 resistors were connected in series in which 10 resistors of 100kΩ ohm each and last resistor with 1kΩresistor.

This divider can be employed to measure high voltage generated. Calculations were done as follows:
100k ohm * 10= 100*1000*10=1000000 ohms
1k ohm = 1000 ohms
Therefore ratio is 1000000 ohm: 1000 ohm =1000: 1
Implies if the voltage across 1k ohm resistors shown is 1V then the total voltage output is
1*(1000/1) =1000=1kv
This Implies 1v in 1kv for each resistor is about 1kv.

The fabricated potential divider with wooden support is as shown in figure below.

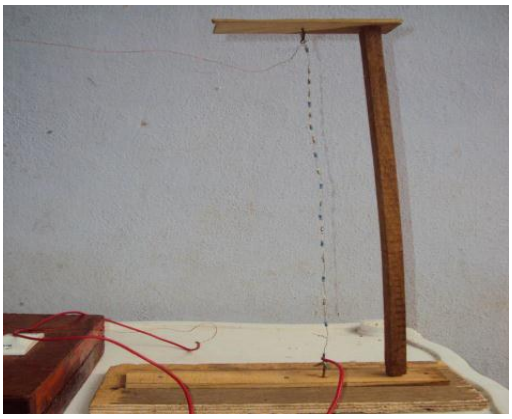

Fig. 10 Fabricated Resistance potential divider for measurement of generated high voltage

III. RESULTS OF TESTING THE TESLA COIL

When the input D.C. was changed, the following two results were obtained for the fabricated Tesla coil model as

1. If input D.C. is 3+3+3=9v dc then output is 11.6kV to 13.5 kV A.C under no load.
2. If input is 3+3=6v DC then the output is 5.67kV to 7.2 kV AC under no load. The output depends upon charging of the DC battery inside.

The scaled down Tesla coil was tested for

1. With this model, we got wireless power transmission and which is making incandescent bulb to glow 20 W bulbs. With this it can be concluded that theminimum power obtained by the model was 20 W.
2. Next we studied the breakdown of some solid insulation material such asF-Class Paper, Garflex Paper, Cotton Beeds, Transformer Insulation Paper.

After assembly of all parts, connection of ground wire and the connection of resistance potential divider the scaled down model is shown in the figure below.

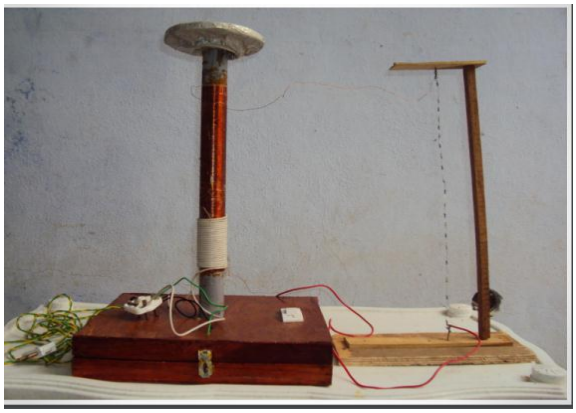

Fig. 11 Full assembly with resistance voltage divider

IV. CONCLUSION

It can be concluded that the fabricated scaled down model of the Tesla coil can be used as educational model for demonstration for the U.G. students of High Voltage Engineering subject. Apart from the model can be useful for the demonstration of wireless transmission of electrical power and breakdown studies of some of the solid dielectric materials as mentioned in the previous section. Further this can be employed for the Lightening phenomenon in controlled fashion in educational laboratories.

REFERENCES

[1] M.S. Naidu and V.Kamaraju, *High Voltage Engineering*, 5th edition, McGraw Hill Education (India) Private Limited. Second reprint 2014.

[2] A Nikola Tesla, "Tuned Lightning",*Ebook, IEEE Press*, pp. 250-400.

[3] RavindraArora, "High voltage and electrical insulation engineering", Chapter: 4, *IEEE Press*, pp. 227-270.

[4] Kevin Wilson, "The Tesla coil- construction and operation", pp. 3-60.

[5] R. E. Iannini, "Electronic gadgets for the evil genius: 21 build-it-yourself projects", pp. 137–202, TAB electronics, New York: McGraw-Hill, 2003.

[6] PrabhavManchanda, "DC TESLA COIL Construction and Applications",*International Journal for Research in Applied Science & Engineering Technology (IJRASET)*,Vol. 4, No. 7, pp. 579-584, July 2016.